North American Electric, Inc.

NA213JP-7.5-2

Special Purpose JP Frame Close-Coupled Pump Motor

Energy Efficient – Three Phase – TEFC - AC Motor - Inverter Rated (10:1 VT; 5:1 CT)

DIMENSIONS – INCHES

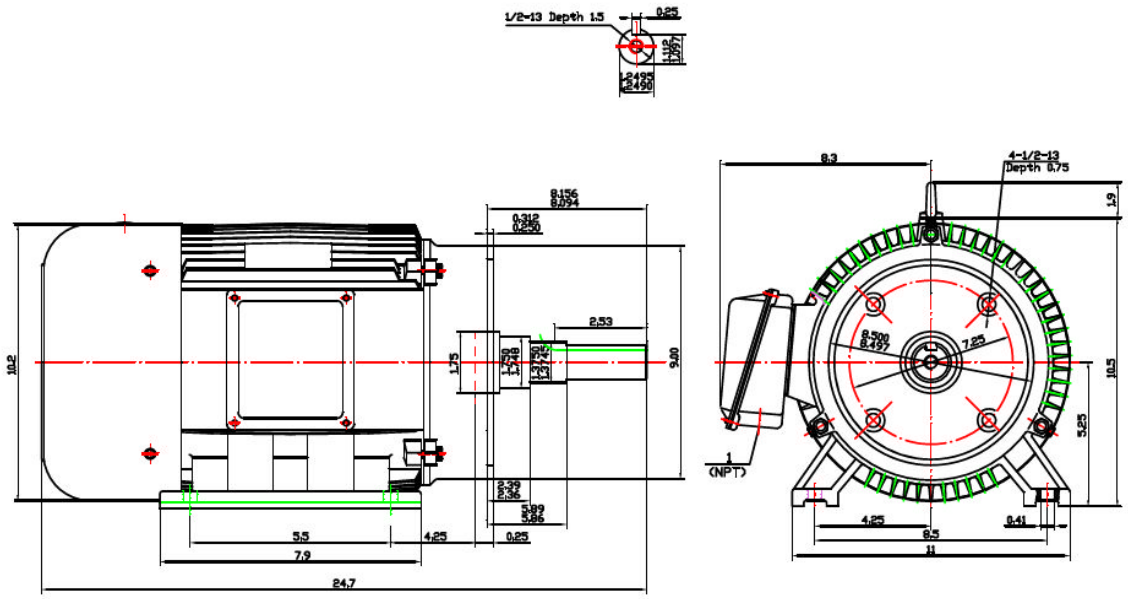

PERFORMANCE DATA

Three Phase – 60Hz - 208-230/460V – NEMA Design B - Max. Ambient: 40° C

HP	Speed	Frame	NEMA Code	Efficiency (%)			Power Factor (%)			Torque (ft-lb)		
				100%	75%	50%	100%	75%	50%	FLT	BDT%	LRT%
7.5	3525	213JP	H	88.5	89.0	89.0	91.0	90.0	85.0	11.2	270	190

Amps (460V)		DE Bearing	ODE Bearing	Insulation Class	Enclosure Type	Service Factor	Weight (lbs)
FLA	LRA						
8.8	63	6308ZZ	6308ZZ	F	TEFC	1.15	140

CANADIAN STANDARDS ASSOCIATION

ISO

North American Electric, Inc. 350 Vaiden Drive, Hernando, MS 38632
Toll Free: 1-800-884-0405 Phone: 662-429-8049 Fax: 662-429-8546
www.naemotors.com