North American Electric, Inc.

NA445T-125-6C

Special Purpose Crusher Duty Motor

Energy Efficient – Three Phase – TEFC - AC Motor - Inverter Rated (10:1 VT; 5:1 CT)

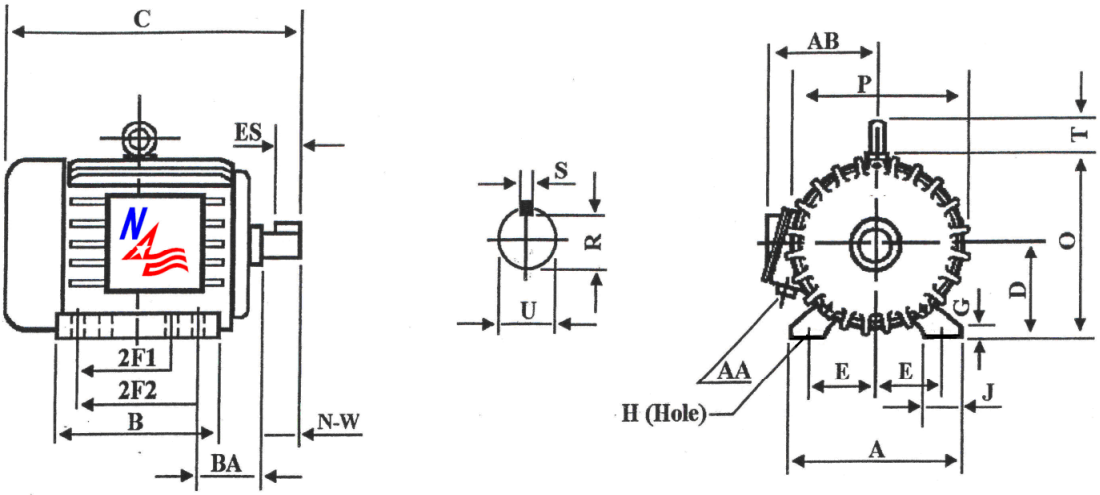

DIMENSIONS – INCHES

A	B	C	D	E	2F1	2F2	G	H	J	O
21.7	22.9	44.3	11.0	9.0	14.5	16.5	1.3	.81	3.15	22.1
P	**R**	**S**	**T**	**U**	**ES**	**AA**	**AB**	**BA**	**N-W**	**Mount**
21.6	2.88	.875	3.0	3.375	6.91	3.0	16.6	7.0	8.5	F1

PERFORMANCE DATA

Three Phase – 60Hz - 460V – NEMA Design C - Max. Ambient: 40° C

HP	Speed	Frame	NEMA Code	Efficiency (%)			Power Factor (%)			Torque (ft-lb)		
				100%	75%	50%	100%	75%	50%	FLT	BDT%	LRT%
125	1180	445T	G	93.0	92.5	92.0	89.0	90.0	87.5	557	210	200

Amps (460V)		DE Bearing	ODE Bearing	Insulation Class	Enclosure Type	Service Factor	Weight (lbs)
FLA	LRA						
143	907	NU319	6318	F	TEFC	1.15	1443

CANADIAN STANDARDS ASSOCIATION

ISO

North American Electric, Inc. 350 Vaiden Drive, Hernando, MS 38632
Toll Free: 1-800-884-0405 Phone: 662-429-8049 Fax: 662-429-8546
www.naemotors.com